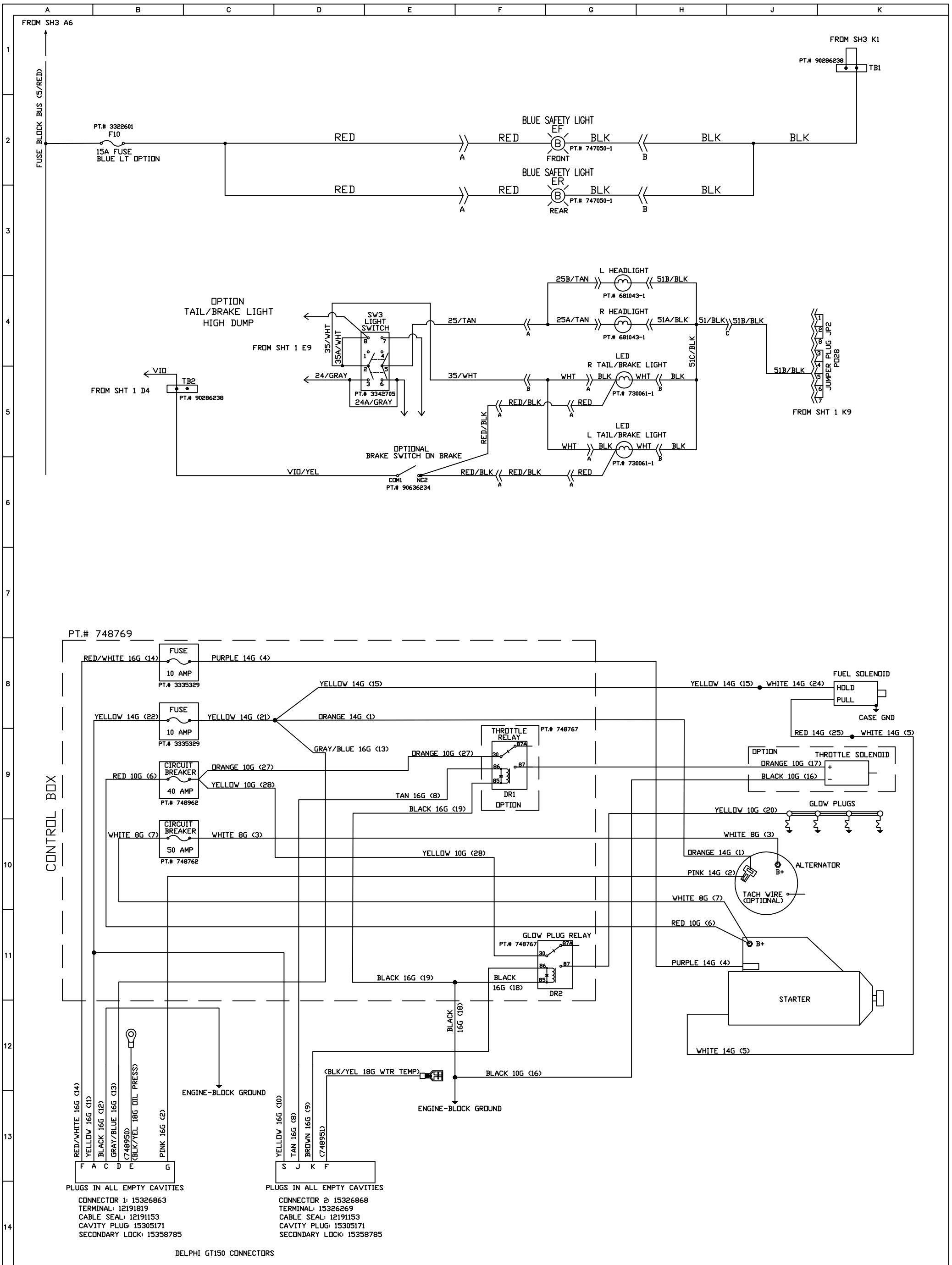

SEE SHEET 1

CONFIDENTIAL

THIS DRAWING AND ALL INFORMATION CONTAINED THEREIN ARE THE EXCLUSIVE PROPERTY OF MINUTEMAN INTERNATIONAL, INC. THIS DRAWING IS NOT TO BE COPIED OR OTHERWISE REPRODUCED WITHOUT EXPRESSED WRITTEN PERMISSION OF MINUTEMAN INTERNATIONAL, INC. IN ADDITION, THIS DRAWING MUST BE RETURNED UPON REQUEST. FURTHER, ALL INFORMATION CONTAINED HEREIN MUST BE MAINTAINED CONFIDENTIAL.

REV	E.C.N.	DATE	CHANGE	BY	CHK BY
J	150447	10/18/18	ADDED JP7 GND JUMPER PLUG & BRAKE LTS	KHH	KHH
H	MIN-13575	10/02/17	ADD BLUE LIGHTS & REAR VIEW CAMERA	KHH	JWP
G	MIN-13523	07/28/17	ADD DRY SWEEP OPT & UPDATE LATCH RELAY	KHH	JWP
F	MIN-13367	11/11/16	ADD MTR PMP OPTION, ADD SHEET 5	KHH	JWP

TITLE: NAUTILUS PT. TO PT. DIAGRAM

SCALE: NTS

MATERIAL: N/A

FINISH: N/A

TOLERANCES (UNLESS OTHERWISE SPECIFIED)
0–1" ± 1/16 .000 ± .005
>1–12" ± 1/4" .00 ± .010
<12" ± 1/2" ANGLES ± 30'

REMOVE BURRS AND BREAK SHARP EDGES .005/.020

SIZE: B

DRAWN BY: MB DATE: 12/20/13

CHECKED BY: JWP DATE: 12/20/13

Minuteman Excellence Meets Clean
14N845 U.S. ROUTE 20
PINGREE GROVE, IL 60140

P.N. 748992

REV: J

SHEET 5 OF 5